July 10, 1962 M. E. KECK 3,043,950

LUMINAIRE

Filed July 26, 1957 3 Sheets-Sheet 1

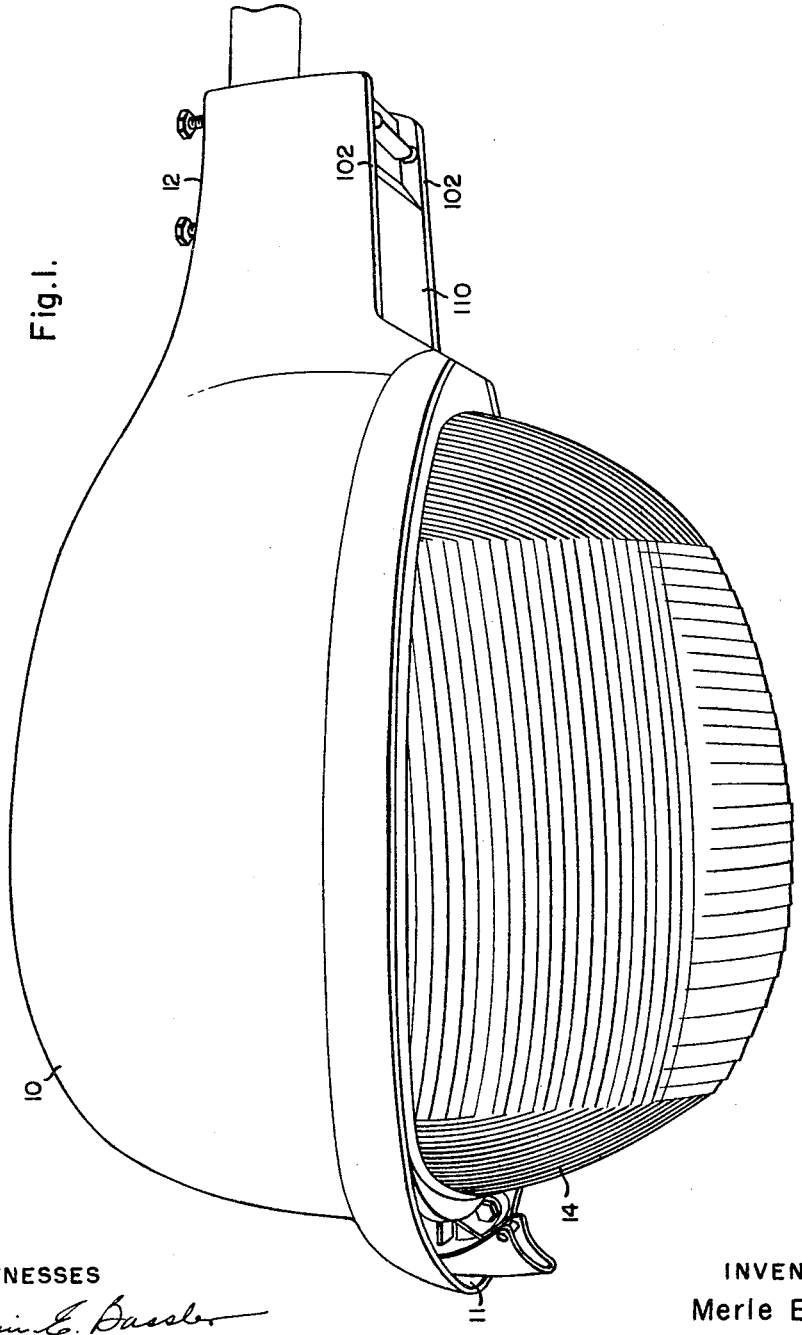

Fig. 1.

WITNESSES

Edwin E. Bassler

James T. Young

INVENTOR

Merle E. Keck

BY Donald J. Smith

ATTORNEY

LUMINAIRE

Filed July 26, 1957 3 Sheets-Sheet 2

Fig. 2.

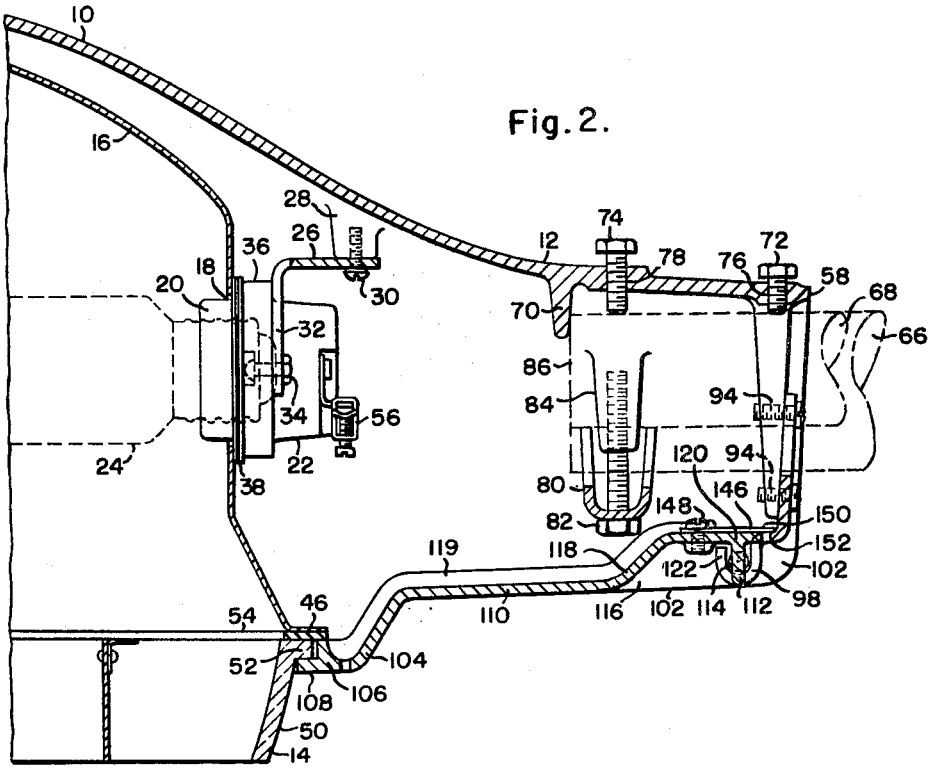

Fig. 4.

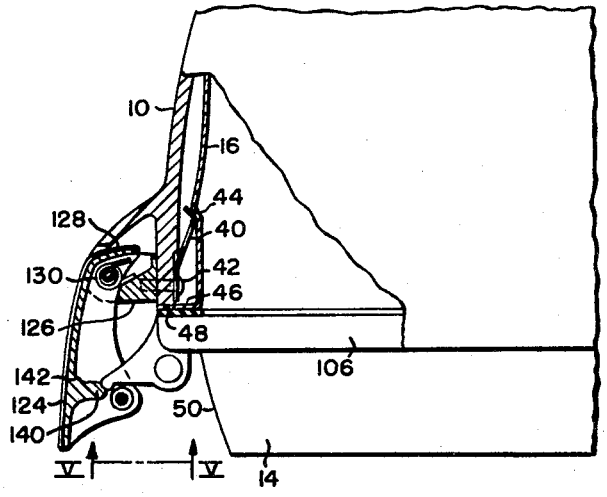

LUMINAIRE

Filed July 26, 1957 3 Sheets-Sheet 3

Fig. 3.

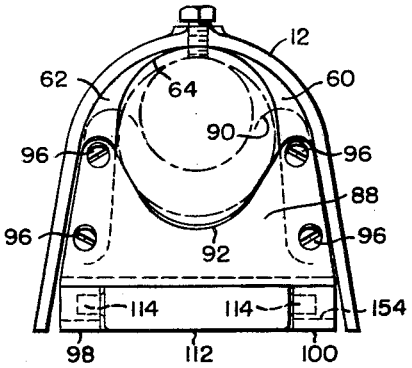

Fig. 6.

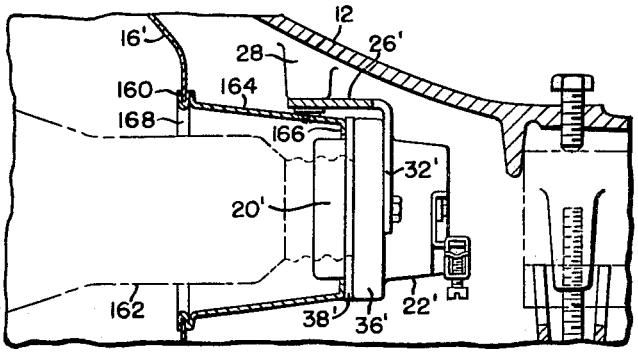

Fig. 5.

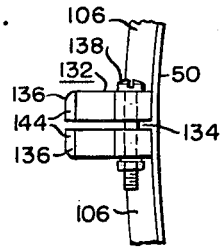

United States Patent Office

3,043,950

Patented July 10, 1962

1

3,043,950

LUMINAIRE

Merle E. Keck, Bay Village, Ohio, assignor to Westinghouse Electric Corporation, East Pittsburgh, Pa., a corporation of Pennsylvania

Filed July 26, 1957, Ser. No. 674,397
17 Claims. (Cl. 240—25)

The present invention relates to structural features of a lighting fixture or luminaire and more particularly to a luminaire of the character described for use in street lighting applications.

Previously proposed luminaires employed for the aforementioned purpose and other exterior applications have been particularly subject to the entry of insects, dust, and other foreign matter. On the other hand, those luminaires which were relatively sealed against the entry of foreign matter were difficult to disassemble for replacement of lighting sources or for purposes of wiring or rewiring as the need arose. More specifically, such luminaires required the use of special tools and permanent fastening devices and the like in order to assemble and disassemble the component parts thereof.

Prior luminaires of this type suffered from the further disadvantage that the reflector and lamp holder and other component parts thereof as well as their physical size prevented the use of differing sizes of light sources therefor. Moreover, the lamp holder frequently has been arranged in these prior devices with the electrical terminals thereof disposed inwardly of the reflector in order to facilitate wiring of the luminaire. This arrangement is disadvantageous in that the exposed wiring terminals presented an electrical shock hazard to personnel engaged in replacing the light source or in other maintenance activity connected with the luminaire.

An additional disadvantage of previously proposed luminaires or lighting fixtures is created by the fact that electrical conduits of two or more sizes are standard for use in supporting the luminaire and for conducting the electrical leads thereto. Presently used conduits are 2 inches and 1¼ inches, respectively, and accordingly, in order to adequately seal prior luminaires, it was necessary to adapt the same for use with only one or the other of the aforesaid conduits. Therefore, luminaires constructed in this fashion were of limited usage in that in most cases separate or additional housings were required in order to accommodate the respective standard conduits.

In view of the foregoing, a novel and efficient luminaire or lighting fixture is contemplated by the invention.

It is intended that such luminaire be provided with means for segregating or shielding the light source thereof from the electrical wiring and terminals.

It is also intended that a single luminaire be provided with means for adapting it to one of a plurality of standard electrical wiring conduits.

It is further contemplated by the invention that the luminaire be provided with means for substantially sealing the optical system thereof against the entry of insects, dirt and other foreign matter.

Means for facilitating access to and wiring of the lumniaire is another object of the invention together with means for providing the accommodation of differing sizes of light sources to the luminaire arrangement.

These and other objectives, features and advantages of the invention will become apparent during the ensuing description of exemplary forms thereof, with the description being taken in conjunction with the accompanying drawings, wherein:

FIGURE 1 is a perspective view of a luminaire or lighting fixture contemplated by the invention and arranged in this example for use in street lighting appilcations;

2

FIG. 2 is a partial, longitudinally sectional view showing the conduit end portion of the luminaire of FIG. 1;

FIG. 3 is an end elevational view of the luminaire portion illustrated in FIG. 2;

FIG. 4 is a partial, longitudinally sectional view of the latching and reflector retaining arrangement of the luminaire illustrated in FIG. 1;

FIG. 5 is a partial bottom plan view of the aforesaid luminaire taken along reference lines V—V of FIG. 4; and

FIG. 6 is a partial, longitudinally sectional view of the conduit end portion of the luminaire of FIG. 1 but showing an internal adaptation, relative to the lampholding means thereof to permit usage of a different size of light source.

In accordance with the invention, a luminaire or lighting fixture is provided with means for accommodating the fixture for use with differing sizes of wiring conduits which conduit is thus arranged for supporting the lighting fixture. The conduit adapting means is further arranged to permit facile leveling or alignment of the lighting fixture relative to the disposition of the conduit. The luminaire is further provided with means associated with the reflector or optical system thereof for accommodating lamp holders of different sizes in order that assorted sizes of lighting sources can be utilized therewith. Additional means are provided for detachably securing the reflector of the luminaire within its housing in a manner that the same can be removed wthout the use of tools or without disassembling any sort of fastening means therefor. Further, in accordance with the invention, the supporting member for the refractor of the luminaire is furnished with means for facilitating access to the wiring and terminal compartment of the luminaire and for securing the refractor mounting member with a minimum of component parts.

Referring now more particularly to FIGS. 1 to 5 of the drawings, the exemplary form of the invention illustrated therein comprises a lighting fixture having a generally ovate housing **10** furnished with a bottom opening **11**. The housing **10** presents an inverted substantially U-shaped hood member terminating in a conduit receiving end portion **12**. A refractor assembly **14** is attached to the housing **10**. As better shown in FIGS. 2 and 4 of the drawings, an inverted bowl-shaped optical reflector assembly **16**, likewise having a bottom opening, is inserted within the housing **10** and generally conforms to the interior walls thereof but for the most part is spaced therefrom. The rearward end of the reflector **16** is provided with an aperture **18**, removed from its aforesaid opening, through which a projecting portion **20** of a lamp holder assembly **22** is inserted. The lamp **22** is arranged for providing electrical contact to a lighting source indicated generally by the reference character **24** and inserted in the lamp holder. The lamp holder, in turn, is mounted within the housing **10** by means of a bracket **26** secured to a pair of suitably disposed projections **28** of the housing **10** by means of conventional fastening means, for example, the screws **30**. The bracket **26** terminates in a generally U-shaped configuration disposed more or less at right angles to the body portion of the bracket. The legs **32** of the U-shaped bracket portion are arranged to straddle the lamp holder **22** and are secured thereto by suitable fastening means, for example, bolts **34**.

When the reflector **16** is positioned as illustrated in FIGS. 2 and 4, it seats against a collar portion **36** of the lamp holder and the aperture **18** of the reflector **16** is sealed by engagement of adjacent portions of the reflector **16** with a generally circular gasket **38** of a compres-

sible resilient material, such as rubber. The opening **18** of the reflector **16** fits relatively closely with the projecting portion **20** of the lamp holder **22** and thus the lamp holder **22** serves as supporting means for the associated end of the reflector **16**.

In this example of the invention, the other end portion of the reflector **16**, as better shown in FIG. 4 of the drawings, is supported relative to the housing **10** by means of a single spring **40**. This spring is secured to the housing **10** with a mounting screw **42** inserted through its lower end. The upward end of the spring **40** projects inwardly and upwardly of the housing **10** in order to provide limited movement thereof relative to the housing wall. The upward extremity of the spring **40** is bent over slightly in order to faciiltate engagement thereof with a dimple **44** formed in the associated end portion of the reflector **16**.

The dimple **44** is so arranged that, when engaged with the spring **40**, a bottom flange portion **46** of the reflector **16** seats against the bottom extremity of the housing wall, as indicated by the reference character **48** (FIG. 4). The aforesaid reflector flange **46** extends entirely around the bottom opening of the reflector and is provided with sufficient width to engage the aforementioned housing wall at the entire periphery of the opening **11** of the housing **10** except, of course, where the latter joins and communicates with the conduit section **12**. It is contemplated that the spring **40** is to be provided with sufficient bias that reflector **16** will be urged rearwardly, when the spring engages the dimple **44** thereof, such that the reflector **16** will seat against the lamp holder **22** and associated gasket **28** with sufficient force to effect a seal between the reflector **16** and the lamp holder collar **36**.

A refractor **50** adapted for use with the luminaire is equipped adjacent its top opening with a similarly arranged flange portion **52** extending around its aforesaid opening. The refractor flange **52** is urged to engage directly the reflector flange **46** when the refractor **50** is mounted in the luminaire or lighting fixture by means presently to be described. In order to seal the optical system of the luminaire, which system comprises the refractor **50** and the reflector **16**, an oval gasket **54** of a material similar to that of gasket **38** is inserted between the respective flanges **46** and **52** of the reflector **16** and the refractor **50**. Accordingly, a sealed optical system is provided by utilizing the aforesaid gasket **54** and the gasket **38** associated with the lamp holder **22** and the reflector aperture **18** as described heretofore and by sealing the refractor **50** directly to the reflector **16**.

As indicated previously, the housing **10** presents a substantially inverted U-shaped hood member which terminates in a conduit engaging slipfitter and wiring container portion **12**. The container portion **12** serves the additional function of housing the major portion of the lamp holder **22** which, in this example of the invention, can be provided with rearwardly extending wiring terminals **56** due to the fact that the open bottomed hood member which terminates in container portion **12** is readily accessible, as described presently, for purposes of making the necessary wiring connections. Accordingly, the wiring terminals **56** and associated wiring leads (not shown) are physically separated from the interior portions of the reflector **16**. Therefore, shock hazards resulting from accidental contact with the electrical wiring and terminals when removing or replacing the lighting source **24** are obviated.

Adjacent the outward end **58** of the container portion **12**, there are a pair of opposed vertically extending ribs **60** and **62**, which are fabricated in this example of the invention, integrally with the container **12**. The upward portions of the ribs **60** and **62** are cooperatively curved to form an arcuate configuration, as indicated by the reference character **64**, which configuration is thus adapted to enclose partially an electrical wiring conduit **66** or **68** inserted into the container portion **12**. When thus positioned, the extent to which the conduit **66** or **68** is inserted is determined by a suitably spaced stop **70** likewise formed integrally with a wall section of the container **12**. The top surface of the conduit **66** or **68**, then, can be engaged by a pair of leveling screws **72** and **74** which are threaded through respective spaced, tapped apertures **76** and **78** extending through the top wall of the container **12** adjacent the outward end thereof. These leveling screws **72** and **74** cooperate with suitable clamping means for securing the luminaire to the end portion of the wiring conduit **66** or **68** and for longitudinally aligning the luminaire therewith.

One form of such clamping means arranged for cooperating with the inward leveling screw **74** comprises an inverted yoke **80** of generally U-shape in cross section and arranged to be drawn upwardly into contact with bottom portions of the conduit **66** or **68** by the clamping screws **82**. The screws **82** are threaded into drilled end tapped projections **84** which are secured to the wall portion of a container **12** and which are of suitable size and shape to be inserted within the U-configuration of the yoke **80** when the yoke is drawn upwardly against the conduits **66** or **68**. The desired vertical position of the inward end **86** of the conduit **66** or **68** can be determined, of course, by the threaded disposition of the leveling screw **74** before tightening the yoke **80** in the manner aforedescribed.

Another clamping means arranged here for cooperation with the outer leveling screw **72** is provided in the form of a bracket **88** or **90** as better shown in FIG. 3 of the drawings. The bracket **88** is provided with an inverted yoke portion **92** having an arcuate configuration arranged to engage closely the larger of the wiring conduits **66**. On the other hand, the bracket **90** shown in dashed outline in FIG. 3 similarly is provided with an inverted yoke portion but is shaped to engage closely the smaller of the wiring conduits **68**. Each of the brackets **88** or **90** is provided in this example with four apertures which are arranged for alignment with similarly spaced tapped holes **94** provided in the inwardly extending ribs **60** and **62** of the container **12**. Accordingly, either one of the brackets **88** and **90**, depending on which conduit **66** or **68** is employed, can be secured to the ribs **60** and **62** and disposed outwardly thereof by means of mounting screws **96**.

When the bracket **88** or **90** is thus secured in position by the mounting screws **96**, the leveling screw **72** is then tightened to clamp the conduit **66** or **68** between the screw **72** and the yoke portion of the respective bracket. When thus secured in position, the leveling screw **72** serves as a pivot about which the conduit **66** or **68** or the housing **10** of the luminaire can be rotated slightly, after first loosening the leveling screw **74** and the yoke **80**, for purposes of alignment. When the proper alignment is determined, the leveling screw **74** and the associated clamping yoke **80** are then retightened to preserve the desired position of alignment of the luminaire with its supporting conduit **66** or **68**.

As better shown in FIGS. 2 and 3 of the drawings, each bracket **88** or **90** terminates in a pair of spaced, pin receiving cradles **98** and **100** of generally U-shaped configuration, the lowermost portion of which is more or less flush with the lower extension **102** of the wall of the container **12**. These cradles are adapted to receive and seat the hinge pins **114**, presently to be described. It is contemplated that additional brackets similar in structure to that of the brackets **88** or **90** can be provided for conduit sizes other than those of the conduits **66** or **68**.

Referring once again to FIGS. 2 and 4 of the drawings, one form of refractor retaining member **104** is illustrated therein. The retaining member comprises a refractor engaging ring **106** having an arcuate or oval configuration conforming generally to and closely fitting with the outer periphery of the refractor **50** adjacent its opening. The ring **106** is split for purposes pointed out hereinafter and is equipped with an inwardly extending flange **108** coextending with the periphery thereof and arranged to en-

gage the undersurface of the refractor flange **52**. When thus engaged and when the retaining member **104** is secured in its operative position by means presently to be described, the refractor flange **52** is urged upwardly against the gasket **54** and the reflector flange **46** extending, as aforesaid, around the periphery of the refractor flange **52**. With this sealing arrangement, a dust-free optical system including the reflector **16** and the refractor **50** is obtained.

Joined to the refractor ring **106** of the retaining member **104** is a container closure section **110** which, when the retaining member is in its aforesaid operative position, forms a bottom wall of the wiring container portion **12**. The closure section **110**, as better shown in FIG. 1 of the drawings, is formed with a contour conforming substantially with the side wall extensions **102** of the container **12** and in addition forms a relatively close fit therebetween in order to minimize the entry of foreign matter into the wiring container portion **12**. The closure section **110** of the mounting member **104** is equipped adjacent its outward end with a transversely extending rib **112** which, in turn, terminates at either end in a pair of hinge pins **114**. Lateral support is provided to the rib **112** by a longitudinally extending rib **116** bridging an upturned portion **118** of the closure section **110**. An additional longitudinal rib **119** desirably is provided on the upward surface of the closure section **110** in order to impart structural strength thereto.

In the operation of the retaining member **104**, the hinge pins **114** thereof are cradled respectively in the pin retaining cradles **98** and **100** of the bracket **88** or **90**, as noted heretofore. The pin cradles **98** and **100** are so formed that when the retaining member **104** is in its fully open position, that is to stay, when it is disposed at a substantial angle to the longitudinal axis of a luminaire, it can be completely removed from the luminaire by raising the retaining member slightly so that the hinge pins **114** and the rearward extremity **120** of the closure section **110** can be lifted over the upper extremities of the terminal legs **122** of the pin cradles **98** and **100**, as shown in FIG. 2 of the drawings. When the retaining member **104** is thus removed or when it is disposed in its fully open position as aforesaid, the wiring and the associated terminals **56**, as well as the yoke clamping screws **82** are fully accessible for adjustment, maintenance or repair as the case may be.

When the retaining member **104** is disposed in its operative position where at the refractor **50** is sealed to the reflector **16** as aforesaid, a latching arrangement is provided at the front end of the refractor ring **106** in order to secure this portion of the retaining member in the aforesaid operative position. As better shown in FIG. 4 of the drawings, the latching arrangement includes a latching lever **124** pivotally secured to a mounting bracket **126** on the housing **10**. Desirably the mounting bracket **126** is provided with a tapped hole into which the screw **42** employed in mounting the spring **40** is threaded for the purpose of securing both the spring **40** and the mounting bracket **126** to the adjacent wall portion of the housing **10**. Latching lever **124** is generally U-shaped in section, and a pivot pin extends through the sides thereof adjacent the upward end of the latching lever **124**, where an inwardly projecting portion **128** is formed, and into openings in the bracket **126** whereby the latching lever **124** is pivoted to the mounting bracket **126**. A suitable spring means **130** is associated with the aforesaid pivot in order to bias the latching lever **124** clockwise to its latching position.

As better shown in FIG. 5 of the drawings, a suitable catch mechanism is included for cooperation with the aforedescribed latching mechanism **124**. In this example of the invention, the catch mechanism, indicated generally by the reference character **132**, is adapted for use with a split refractor ring **106** provided with a gap **134** therein at a position adjacent the catch mechanism **132**. Thus, the catch mechanism **132** includes a pair of spaced outwardly extending prongs **136** secured individually to each extremities of the split ring **106**. The clamping bolt **138** is inserted through a pair of aligned apertures disposed individually in the prongs **136** for the purpose of determining the width of the gap **134** and consequently the tightness of the retaining ring **106** relative to the refractor **50**. In furtherance of this purpose, the extremities of the split refractor ring **106** are initially biased apart to a limited extent. For engagement with the prongs **136**, the latching lever **124** is provided with an inwardly extending transverse projection **140** which, in turn, is provided with one or more indents **142** arranged to seat the nibs **144** formed on the underside of the prongs **136**.

The rearward end of the retaining ring **106** is biased into engagement with the refractor flange **52** and the reflector flange **46** by means associated with the closure section **110** of the retaining member **104**. In furtherance of this purpose, a flat spring **146**, as better shown in FIG. 2 of the drawings, is secured adjacent the rearward end **120** of the closure section **110**. The spring **146** is secured to the closure section **110** by a screw **148** and is furnished at its outward or rearward extremity with a section **150** extending outwardly and rearwardly of the closure section end portion **120**. The section **150** of the spring **146** engages an inward extremity **152** of the bracket **88** or **90**, and accordingly, when the refractor ring **106** is moved from an open position to a position adjacent its latched position, operates to raise the hinge pins **114** a short distance above the lowermost inner portion **154** of the pin retaining cradles **98** and **100**, respectively, as better shown in FIG. 3 of the drawings.

However, when the retaining member **104** and its refractor ring **106** are moved to their operative position whereat the flanges **46** and **52** of the reflector **16** and the refractor **50** respectively are tightly engaged with the gasket **54** inserted therebetween, the leverage induced at the rearward portions of the aforesaid flanges when the frontal portions thereof are secured by the latching means described in FIG. 4, tends to flex the flat spring **146**, and to move hinge pins **114** secured to the closure section **110** toward the bottom portions of the pin cradles **98** and **100**, respectively. However, this movement of the pins **114** applies the biasing force of the flexed spring **146** to the aforesaid rearward portions of the refractor and reflector flanges. Thus, additional biasing force is applied to the sealing gasket **54** inserted between the reflector **16** and the refractor **50** in order to ensure a dust-free optical system.

Referring now more particularly to FIG. 6 of the drawings, an arrangement is shown therein for accommodating a relatively larger lighting source than that discussed in connection with FIG. 2. In this latter form of the invention, the mounting bracket **26'** is substantially similar to the mounting bracket **26** of FIG. 2 but is mounted in a reversed position. A lamp holder or socket **22'** is secured to the legs **32'** of the bracket **26'** in a manner similar to the mounting arrangement illustrated in FIG. 2. When mounted in this fashion, the lamp holder **22'** is spaced rearwardly from an aperture **160** of the reflector **16'** but is detachably sealed thereto by means presently to be described. With this arrangement a relatively longer or larger lighting source, indicated generally by the reference character **162**, can be inserted in the socket **22'** such that a portion of the non-light-emitting segment thereof is inserted through the aperture **160** of the reflector **16'** in order properly to engage the lamp holder or socket **22'**.

One form of the aforementioned detachable sealing means includes a hollow frusto-conical section **164** which is secured to the reflector **16'** in communication with the aperture **160** thereof. The rearward end of the frusto-conical section terminates in an inwardly extending substantially circular flange **166**. The flange **166** thus is arranged to fit relatively closely with the projecting portion **20'** of the lamp holder **22'** and thereby aids in supporting the adjacent end of the reflector **16'**. In furtherance of this purpose, the frusto-conical section **164** is rigidly secured, in this example, to the reflector **16'** ad-

jacent the aperture **160** thereof by means of the rolled over edge portions indicated generally by the reference character **168**. When the reflector **16'** is arranged in its operative position, the rearward biasing force applied thereto by the spring **40** (FIG. 4) urges the flange **166** of the frusto-conical section against the sealing gasket **38'** inserted between the collar portion **36'** of the lamp holder and the flange **166** of the frusto-conical section **164**. It is contemplated that a frusto-conical section (not shown) of a differing relative axial length than that illustrated in FIG. 6 can be provided for accommodating in cooperation with a different sized mounting bracket (not shown) and a lighting source of another size than that of the sources **162** or **24**, within the structural limits of the luminaire housing **10** and wiring container portion **12**.

From the foregoing it will be apparent that novel and efficient forms of a street lighting fixture or other type of luminaire have been disclosed herein. As indicated heretofore, the luminaire contemplated by the invention is adapted for assembly and disassembly within a minimum of time and effort and with a relatively small number of component parts. Although the novel features of the lighting fixture according to the invention have been discussed primarily in conjunction with a luminaire for street lighting applications, it will be apparent that one or more of these features can be adapted with equal facility for use in other types of lighting fixtures.

Therefore, numerous modifications of the invention will occur to those skilled in the art without departing from the spirit and scope of the invention. Moreover, it is to be understood that certain features thereof can be employed without a corresponding use of other features.

Accordingly, what is claimed as new is:

1. In a luminaire, the combination comprising a housing having a bottom opening, a reflector having a bottom opening mounted in said housing and being generally similarly shaped relative to said housing, said reflector having an outwardly extending flange secured thereto at a position adjacent its opening, said flange being engageable with said housing at said housing opening, a slipfitter and wiring container portion with an open bottom secured to said housing and communicating therewith, said reflector having an aperture therein communicating with said container portion, lampholding means mounted within said container portion and extending through said aperture in an adjacent portion of said reflector, sealing means mounted on the periphery of said lampholding means extending through said aperture, said sealing means having a flat radial side portion which abuts against the reflector when said lampholding means is in its operative position so as to seal said aperture, a refractor having an upward opening and an outwardly extending flange adjacently surrounding said opening, said reflector and refractor flanges being substantially coextensive, gasketing means disposed between said flanges, and means for clamping said flanges together, with said gasketing means compressed therebetween and adjacent to said housing opening so as to seal said refractor to said reflector.

2. A luminaire comprising a housing having a bottom opening, a reflector having a bottom opening and mounted within said housing, a slipfitter and wiring container portion projecting from said housing and having an open bottom, said reflector having an aperture formed therein at a position adjacent said container portion, lampholding means mounted within said container portion and having a socket part thereof extending through said aperture, sealing means located between said reflector and said lampholding means, a reflector retaining spring secured to a portion of said housing at a position generally opposite from said lampholding means, means on said reflector for detachably engaging said spring, said spring when engaging said reflector urging said reflector against said sealing means and said lampholding means so as to seal the junction between the reflector and the lampholding means at said aperture, a container cover hingedly mounted to the bottom of said container portion, a refractor retaining ring secured to said container cover and pivotal therewith, a refractor having an upper opening generally conforming to the bottom opening of said reflector, said refractor being mounted in the retaining ring, mating flanges around both the openings of said reflector and refractor, and means disposed to engage said ring at a position generally opposite from said container cover for securing said cover and said ring in their operative closed positions so that said mating flanges and said aperture sealing means serve to provide a sealed optical system and the bottom of said slipfitter and wiring container portion is closed by said cover.

3. In a luminaire, the combination comprising an ovate shaped housing provided with a bottom opening, an ovate shaped reflector having a bottom opening and being secured within said housing, a slipfitter and wiring container portion joined to said housing and communicating therewith, said container portion having a bottom opening, a refractor having an upper opening generally coextensive with the bottom opening of said reflector, a refractor retaining ring combined with a container portion bottom closure, mating means adjacent the peripheries of both said reflector and said refractor, said refractor mounted in the retaining ring, said closure being hingedly secured to said container portion at the outermost remote end, and means on a section of said ring opposite from said closure for detachably securing said ring to said housing so that when said luminaire is in its operative position said refractor is mated with said reflector and the bottom opening of said slipfitter and wiring container portion is closed.

4. In a luminaire, the combination comprising a housing provided with a bottom opening, a reflector having a bottom opening and being detachably secured within said housing, a slipfitter and wiring container portion joined to said housing and communicating therewith, said container portion having a bottom opening, a refractor having an upper opening generally coextensive with the bottom opening of said reflector, a refractor retaining ring combined with a container bottom closure, said refractor being mounted in the retaining ring, mating flanges around the peripheries of the openings of both said reflector and said refractor, said closure being hingedly secured to said container portion, means disposed to engage said ring at a position opposite from said closure for detachably securing said ring and said closure in their operative closed position so that said refractor is mated with said reflector and the bottom opening of said slipfitter and wiring container portion is closed, and flat spring biasing means located on the inner side of the container bottom closure for urging the adjacent section of said retaining ring and its mounted refractor into engagement with said reflector at said operative position.

5. In a luminaire, the combination comprising a housing provided with a bottom opening, a reflector having a bottom opening and being detachably secured within said housing, a slipfitter and wiring container portion joined to said housing and communicating therewith, said container portion having a bottom opening, a refractor having an upper opening generally coextensive with the bottom opening of said reflector, a refractor retaining ring combined with a container portion bottom closure, said refractor being mounted in the retaining ring, mating flanges around the peripheries of the openings of both said reflector and said refractor, said closure being hingedly secured to the outermost end of said container portion, means associated with a section of said ring opposite from said container portion for detachably securing said ring in its operative position so that said refractor is mated with said reflector and the bottom opening of said container portion is closed, and flat spring biasing means located on the inner side of said wiring container for urging the adjacent section of said retain-

ing ring and its mounted refractor into engagement with said reflector at said operative position, said hinged mounting including a pair of hinge pins secured to said bottom closure and a pair of pin retaining cradles secured to said container portion, said pins being freely mounted within said cradles.

6. In a luminaire, the combination comprising a housing provided with a bottom opening, a reflector having a bottom opening and being detachably secured within said housing, a slipfitter and wiring container portion joined to said housing and communicating therewith, said container portion having a bottom opening, a refractor having an upper opening generally coextensive with the bottom opening of said reflector, means on said reflector and refractor for sealing the peripheries of the openings of said reflector and refractor together when the luminaire is in its operative position, a refractor retaining ring combined with a container portion bottom closure, said refractor being mounted in the retaining ring, said closure being hingedly secured to said container portion, means associated with a section of said ring opposite from said closure section for detachably securing said ring in its operative position so that said refractor is engaged and sealed with said reflector and the bottom opening of said container portion is closed, and biasing means located on said container portion for urging the adjacent section of said retaining ring and its mounted refractor into engagement with said reflector at said operative position, said biasing means including flat spring means secured to the inner portion of said container closure and cooperating with a projection secured to a transverse wall of said container portion for urging said closure upwardly at the operative position of said closure and retaining ring.

7. In a luminaire, an ovate shaped housing having a bottom opening, an ovate shaped reflector having a bottom opening and readily detachably mounted within said housing, an aperture formed in said reflector, lampholding means mounted adjacent said reflector within said housing, said lampholding means protruding through said aperture in said reflector and supporting one end of said reflector, and spring means engageable with a portion of said reflector generally opposite from said aperture for detachably securing another end of said reflector within said housing.

8. In a luminaire, the combination comprising an ovate shaped housing having a bottom opening, an ovate shaped open bottom reflector readily detachably mounted in said housing, an aperture formed in said reflector, lampholding means mounted in said housing and extending through said aperture in said reflector for supporting one end of said reflector, reflector sealing means located between the reflector and the lampholding means, and spring means mounted within said housing at a position generally opposite said reflector aperture, said spring means cooperating with an indent formed in an adjacent portion of said reflector for detachably securing another end of said reflector within said housing and for urging said reflector against said reflector sealing means to seal said reflector aperture with said lampholding means.

9. In a luminaire, the combination comprising a housing having a bottom opening, a reflector having a bottom opening and readily detachably mounted within said housing, an aperture formed in said reflector, lampholding means mounted adjacent said reflector within said housing, said lampholding means protruding through said aperture in said reflector and supporting one end of said reflector, reflector sealing means located between the reflector and lampholding means so as to seal the junction between the reflector and the lampholding means at said aperture, and spring means engageable with a portion of said reflector generally opposite from said aperture for detachably securing another end of said reflector within said housing.

10. In a luminaire, the combination comprising an ovate shaped housing provided with a bottom opening, an ovate shaped reflector having a bottom opening and mounted within said housing, an aperture formed in said reflector, a lighting source supporting means mounted within said housing adjacent said aperture formed in said reflector, a generally tubular section secured to said reflector and communicating with said reflector aperture, said section extending to said supporting means for engagement, an opening in the outer end of said tubular section, a sealing means located adjacent said tubular section opening between said reflector and said lighting source supporting means, and means detachably engageable with a portion of said reflector generally opposite from said aperture for removably securing said reflector within said housing and for urging said reflector and said tubular extension towards said supporting means to engage said reflector sealing means so as to seal the junction between said tubular extension and said supporting means at said tubular section opening.

11. In a luminaire, the combination comprising an ovate shaped housing provided with a bottom opening, an ovate shaped reflector having a bottom opening and readily detachably mounted within said housing, a slipfitter and wiring container portion joined to said housing and communicating therewith, said reflector having an aperture formed therein at a position adjacent said portion, a hollow section secured to the reflector in communication with said aperture and extending outwardly from said reflector into said portion, inturned flange means on the end of said section spaced from the reflector, lampholding means mounted in said portion so as to have a socket part thereof extending into said end of the section and have another part thereof including a sealing means abutting the inturned flange means of said section when in an operable position, and resilient means detachably engageable with a portion of said reflector generally opposite from the apertured end thereof for removably securing said reflector within said housing and for urging said reflector and said section towards said lampholding means to engage said sealing means.

12. In a luminaire for street lighting employing a source of light supported at one end and supplied from a power source, in combination, a refractor, an inverted bowl-shaped reflector sealed with the refractor, said reflector having an opening in one end thereof, an inverted generally U-shaped hood member located adjacent said one end of said reflector and extending outwardly therefrom, a socket for the light source mounted in and sealing said opening in the reflector, and terminals carried by the socket for connecting it to the power source, said socket being located inside the reflector and the terminals being located outside the reflector for ready engagement with electric wiring leads extendible through said hood member.

13. In a luminaire, the combination comprising an ovate shaped housing having a bottom opening, an ovate shaped open bottom reflector readily detachably mounted in said housing, an aperture formed in said reflector, lampholding means mounted in said housing and extending through said aperture and supporting one end of said reflector, reflector sealing means located between the reflector and the lampholding means, and resilient means secured to one of said housing and said reflector at a position generally opposite said reflector aperture, said resilient means engaging an adjacent portion of the other of said housing and said reflector for detachably securing another end of said reflector within said housing and for urging said reflector against said reflector sealing means to seal said reflector aperture with said lampholding means.

14. In a luminaire, the combination comprising an ovate shaped housing having a bottom opening, an ovate shaped open bottom reflector readily detachably mounted in said housing, an aperture formed in one end of said reflector, lampholding means mounted in said housing and extending through said aperture and supporting the

one end of said reflector, sealing means located between the reflector and the lampholding means, and resilient means for detachably securing another end of said reflector within said housing and for urging said reflector against said sealing means to seal said reflector aperture with said lampholding means.

15. In a luminaire, the combination comprising a housing having a bottom opening, a reflector having a bottom opening, said reflector being mounted in said housing and having the same general configuration as said housing, said reflector having an outwardly extending flange located adjacent its opening, a slipfitter and wiring container portion having an open bottom and extending from said housing so as to communicate therewith, said reflector having an aperture communicating with said container portion, lampholding means mounted within said container portion and extending through said reflector aperture, sealing means located around the periphery of said lampholding means, said sealing means having a flat radial side portion which is engaged between said reflector and said lampholding means when the reflector is in its operative position so as to seal said aperture, a refractor having an upward opening and an outwardly extending flange adjacently surrounding said opening, said reflector and refractor flanges being substantially coextensive, and means for clamping said flanges together so as to seal said refractor to said reflector.

16. In a luminaire, the combination comprising a generally ovate shaped housing provided with a bottom opening, an ovate shaped reflector having a bottom opening and being secured to and generally located within said housing, a refractor having an upper opening generally coextensive with the bottom opening of said reflector, an elongated retaining ring hingedly secured at one of its ends to said luminaire, said refractor mounted in said retaining ring, mating flanges around the peripheries of the openings of both said reflector and said refractor, means disposed to engage said retaining ring generally at its other end to said luminaire for securing said retaining ring in its operative closed position, and means for sealingly engaging said mating flanges in said operative closed position to prevent undesirable material from entering therebetween.

17. In a luminaire, the combination comprising an elongated generally dish-shaped housing provided with a bottom opening and having an inverted generally U-shaped hood portion joined adjacent one end of said housing, a generally dish-shaped reflector having a bottom opening and being secured to and located within the dish-shaped portion of said housing, a refractor having an upper opening generally coextensive with the bottom opening of said reflector, an elongated retaining ring hingedly secured at one of its ends to the end of said hood member remote from said reflector, said refractor being mounted in said retaining ring, mating flanges around the peripheries of the openings of both said reflector and said refractor, the outer periphery of said retaining ring being generally coextensive with the bottom opening of said housing including said hood portion, and means disposed to engage said retaining ring generally at its other end to said luminaire for securing said retaining ring in its operative closed position, said mating flanges being brought into a juxtaposed relationship and the bottom opening of said housing and its hood portion being generally closed by said retaining ring in the operative closed position thereof.

References Cited in the file of this patent

UNITED STATES PATENTS

1,240,452	Hotchkin	Sept. 18, 1917
1,761,528	Fyrberg	June 3, 1930
2,304,208	Rolph	Dec. 8, 1942
2,732,483	Elmer	Jan. 24, 1956
2,763,774	Beach et al.	Sept. 18, 1956
2,778,929	Loehr	Jan. 22, 1957
2,829,243	Stonehill	Apr. 1, 1958
2,840,690	Harling	June 24, 1958
2,849,574	Burns et al.	Aug. 26, 1958